ZDF-6152L

TANK PRESSURE DUAL FLUSH VALVE

Dimensional Data (mm) are Subject to Manufacturing Tolerances and Change Without Notice

ENGINEERING SPECIFICATION

- Suit 6L back entry pans
- Min water supply pressure - 50kPa
- Max water supply pressure - 300kPa
- Flush volume - 6 / 3L adjustable
- Flow rate required - 1.5L per sec
- Small diamater option: ZDF-6152L-SD

STANDARDS COMPLIANCE

- WELS – 3 Star – 3.6L
- WELS Registration No. L07407
- Watermarked Approved - WM-00307

The more stars the more water efficient
WATER RATING
www.waterrating.gov.au
3.6 litres average flush
5.7 L per full flush / 3.17 L per half flush
In accordance with AS/NZS 6400
Licence No. 0025
Reece Ltd

WaterMark
WM-000307

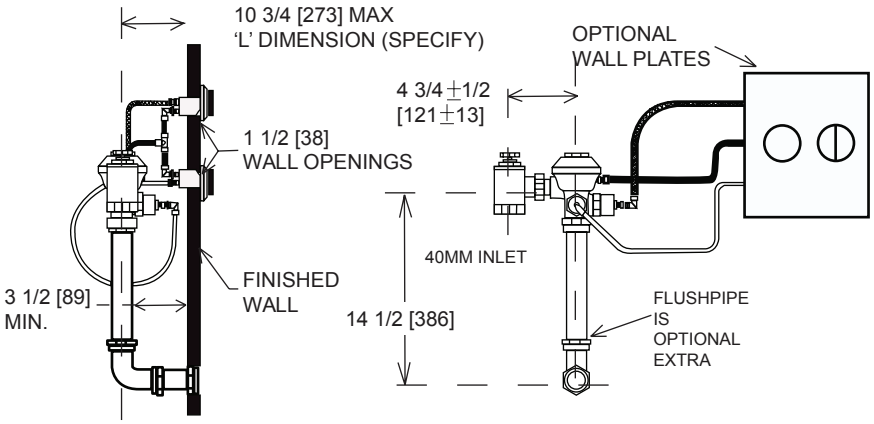

OPTIONS

CODE	DESCRIPTION
ZDF-6152PS	200x100mm stainless steel panel
ZDF-6152P	300x300mm stainless steel panel
ZH-6152BX12	300x300mm stainless steel panel and frame
FPCP-40	40 x 450 x 450mm stainless steel flush pipe